# Cylindrical roller bearing NJ305-E-XL-TVP2-C3 FAG

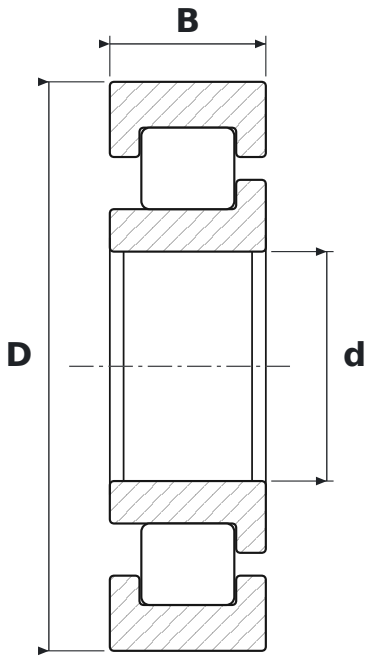


## DIMENSIONS

| | | |
|---|---|---|
| **d** | bore diameter | **25 mm** |
| **D** | outside diameter | **62 mm** |
| **B** | width | **17 mm** |

## WHAT NJ305-E-XL-TVP2-C3 MEANS

| | |
|---|---|
| **E** | reinforced design, higher load rating |
| **XL** | jakość X-life – mniejsza chropowatość i większa dokładność geometryczna bieżni, wyższa nośność i trwałość |
| **TVP2** | polyamide window cage, design 2 (FAG) |
| **C3** | radial clearance greater than normal |

## SPECIFICATIONS

| | |
|---|---|
| Manufacturer | **FAG** |
| Manufacturer designation | **NJ305-E-XL-TVP2-C3** |
| Rolling elements | **single-row cylindrical roller bearing** |
| Basic dynamic load rating C | **48 kN** |
| Basic static load rating C0 | **36.5 kN** |
| Mass | **0.249 kg** |