Cylindrical roller bearing NJ306 ETC3 NSK

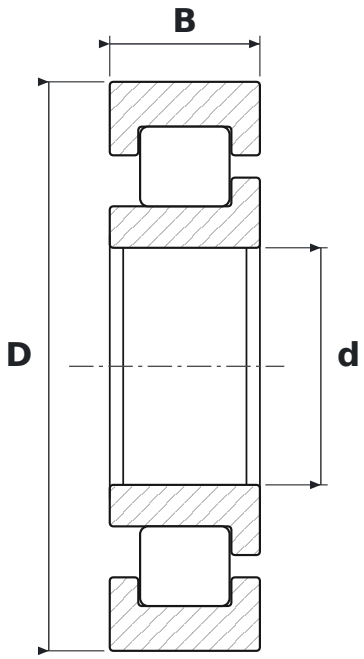

DIMENSIONS

d	bore diameter	**30 mm**
D	outside diameter	**72 mm**
B	width	**19 mm**

WHAT NJ306 ETC3 MEANS

E	reinforced design, higher load rating
T	koszyk z poliamidu 66 wzmocnionego włóknem szklanym
C3	radial clearance greater than normal

SPECIFICATIONS

Manufacturer	**NSK**
Manufacturer designation	**NJ306 ETC3**
Rolling elements	**single-row cylindrical roller bearing**