CASTOMER

DATASHEET

Cylindrical roller bearing NJ308 ECMLC3 SKF

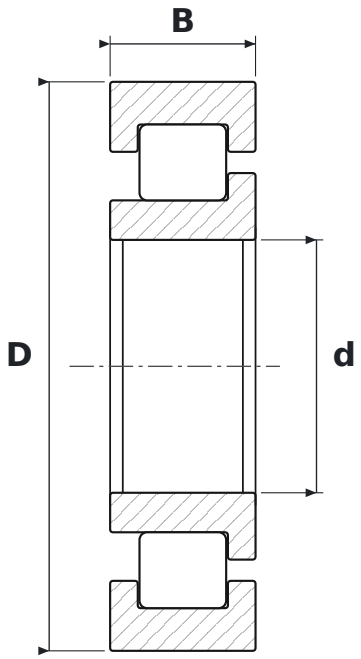

DIMENSIONS

d	bore diameter	**40 mm**
D	outside diameter	**90 mm**
B	width	**23 mm**

WHAT NJ308 ECMLC3 MEANS

EC	reinforced EC design, more rollers (SKF)
ML	koszyk mosiężny masywny okienkowy, prowadzony na pierścieniu wewnętrznym lub zewnętrznym
C3	radial clearance greater than normal

SPECIFICATIONS

Manufacturer	**SKF**
Manufacturer designation	**NJ308 ECMLC3**
Rolling elements	**single-row cylindrical roller bearing**
Mass	**0.744 kg**