Cylindrical roller bearing NJ308 ET NSK

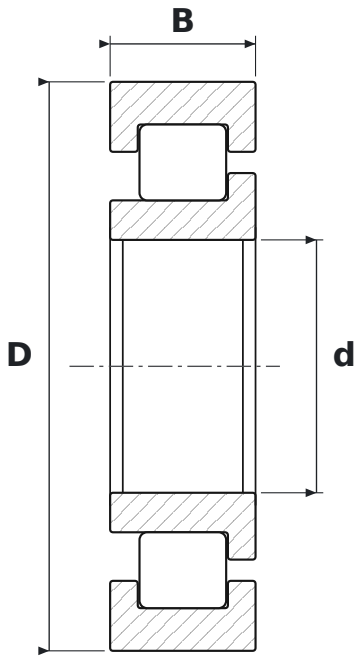

DIMENSIONS

d	bore diameter	**40 mm**
D	outside diameter	**90 mm**
B	width	**23 mm**

WHAT NJ308 ET MEANS

E	reinforced design, higher load rating
T	koszyk z poliamidu 66 wzmocnionego włóknem szklanym

SPECIFICATIONS

Manufacturer	**NSK**
Manufacturer designation	**NJ308 ET**
Rolling elements	**single-row cylindrical roller bearing**