Cylindrical roller bearing NJ311 ECP/C5 SKF

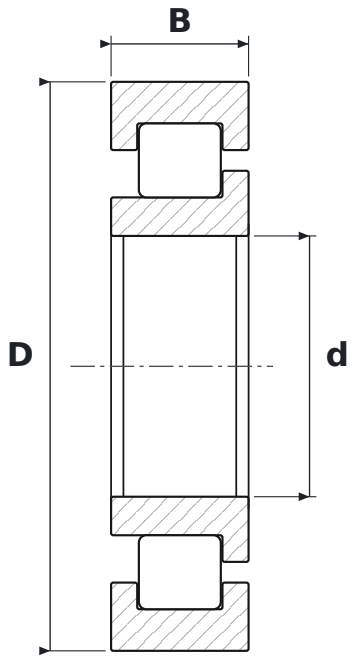

DIMENSIONS

d	bore diameter	**55 mm**
D	outside diameter	**120 mm**
B	width	**29 mm**

WHAT NJ311 ECP/C5 MEANS

ECP	EC design, polyamide cage (SKF)
C5	very large radial clearance

SPECIFICATIONS

Manufacturer	**SKF**
Manufacturer designation	**NJ311 ECP/C5**
Rolling elements	**single-row cylindrical roller bearing**