CASTOMER

DATASHEET

Cylindrical roller bearing NJ319 EMC3 NSK

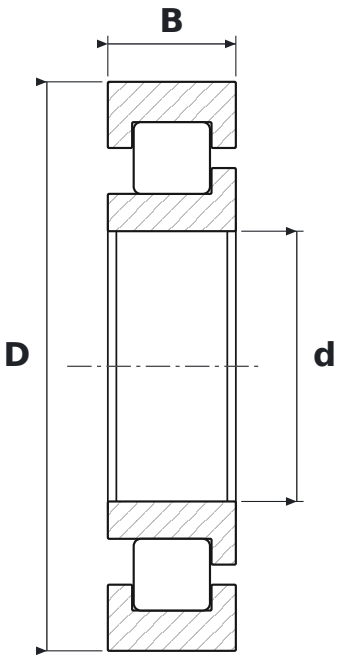

DIMENSIONS

d	bore diameter	**95 mm**
D	outside diameter	**200 mm**
B	width	**45 mm**

WHAT NJ319 EMC3 MEANS

EM	machined brass cage (NSK)
C3	radial clearance greater than normal

SPECIFICATIONS

Manufacturer	**NSK**
Manufacturer designation	**NJ319 EMC3**
Rolling elements	**single-row cylindrical roller bearing**
Mass	**6.44 kg**