Cylindrical roller bearing NJ319 KOYO

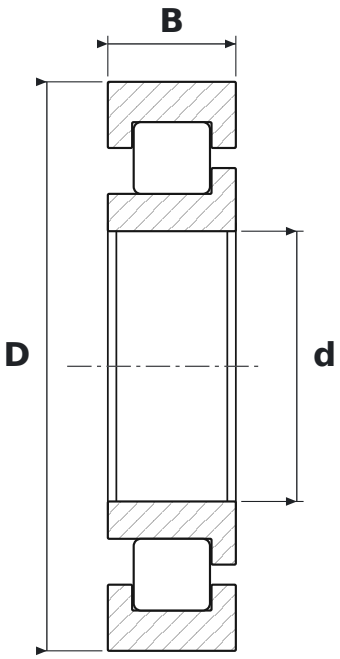

DIMENSIONS

d	bore diameter	**95 mm**
D	outside diameter	**200 mm**
B	width	**45 mm**

SPECIFICATIONS

Manufacturer	**KOYO**
Manufacturer designation	**NJ319**
Rolling elements	**single-row cylindrical roller bearing**
Seal	**open – no seals**
Radial internal clearance	**CN – normal**