Cylindrical roller bearing NJ319 WC3 NSK

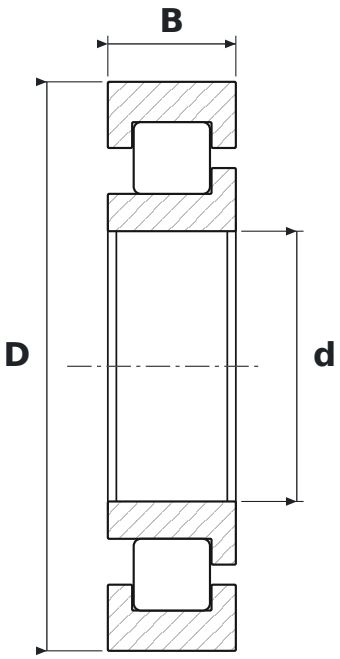

DIMENSIONS

d	bore diameter	**95 mm**
D	outside diameter	**200 mm**
B	width	**45 mm**

WHAT NJ319 WC3 MEANS

W	koszyk stalowy tłoczony
C3	radial clearance greater than normal

SPECIFICATIONS

Manufacturer	**NSK**
Manufacturer designation	**NJ319 WC3**
Rolling elements	**single-row cylindrical roller bearing**
Mass	**6.561 kg**