Cylindrical roller bearing NJ320 ECM/C3 SKF

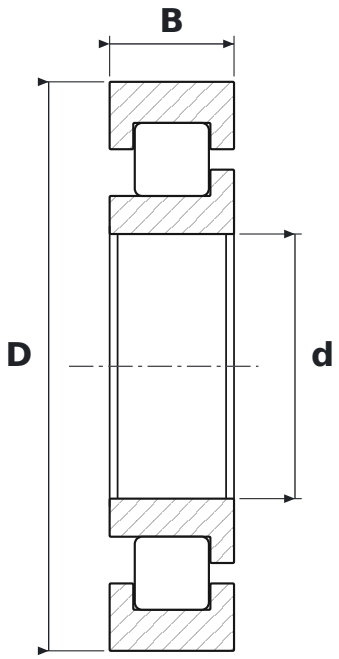

DIMENSIONS

d	bore diameter	**100 mm**
D	outside diameter	**215 mm**
B	width	**47 mm**

WHAT NJ320 ECM/C3 MEANS

ECM	EC design, machined brass cage (SKF)
C3	radial clearance greater than normal

SPECIFICATIONS

Manufacturer	**SKF**
Manufacturer designation	**NJ320 ECM/C3**
Rolling elements	**single-row cylindrical roller bearing**