Cylindrical roller bearing NJ320 ECMC4VA301 SKF

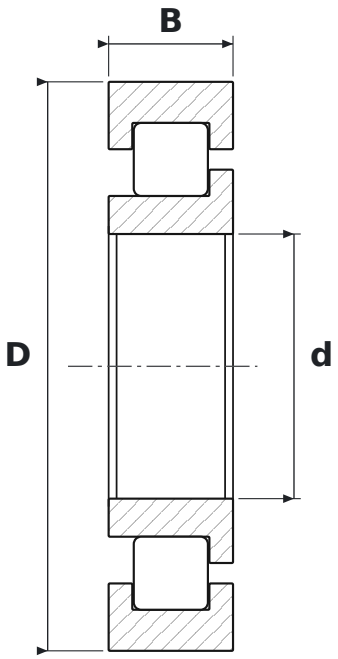

DIMENSIONS

d	bore diameter	**100 mm**
D	outside diameter	**215 mm**
B	width	**47 mm**

SPECIFICATIONS

Manufacturer	**SKF**
Manufacturer designation	**NJ320 ECMC4VA301**
Rolling elements	**single-row cylindrical roller bearing**
ECM	**EC design, machined brass cage (SKF)**
C4	**large radial clearance**
Seal	**open – no seals**
Cage	**Brass**