# Cylindrical roller bearing NJ326 ECJC3 SKF

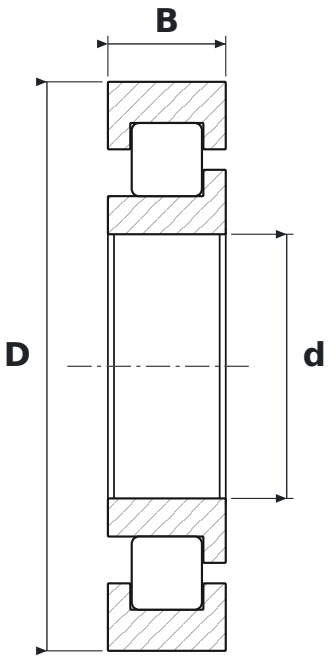


## DIMENSIONS

| | | |
|---|---|---|
| **d** | bore diameter | **130 mm** |
| **D** | outside diameter | **280 mm** |
| **B** | width | **58 mm** |

## WHAT NJ326 ECJC3 MEANS

| | |
|---|---|
| **ECJ** | EC design, pressed steel cage (SKF) |
| **C3** | radial clearance greater than normal |

## SPECIFICATIONS

| | |
|---|---|
| Manufacturer | **SKF** |
| Manufacturer designation | **NJ326 ECJC3** |
| Rolling elements | **single-row cylindrical roller bearing** |
| Mass | **16.36 kg** |