# Cylindrical roller bearing NJ326-E-XL-TVP2 FAG

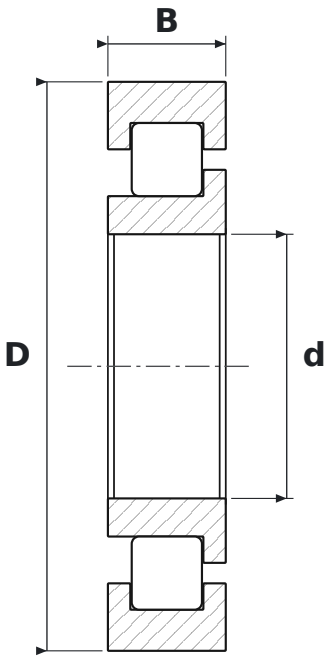


## DIMENSIONS

| | | |
|---|---|---|
| **d** | bore diameter | **130 mm** |
| **D** | outside diameter | **280 mm** |
| **B** | width | **58 mm** |

## WHAT NJ326-E-XL-TVP2 MEANS

| | |
|---|---|
| **E** | reinforced design, higher load rating |
| **XL** | jakość X-life – mniejsza chropowatość i większa dokładność geometryczna bieżni, wyższa nośność i trwałość |
| **TVP2** | polyamide window cage, design 2 (FAG) |

## SPECIFICATIONS

| | |
|---|---|
| Manufacturer | **FAG** |
| Manufacturer designation | **NJ326-E-XL-TVP2** |
| Rolling elements | **single-row cylindrical roller bearing** |
| Basic dynamic load rating C | **680 kN** |
| Basic static load rating C0 | **670 kN** |
| Mass | **16.7 kg** |