Cylindrical roller bearing NJ328 ECJ SKF

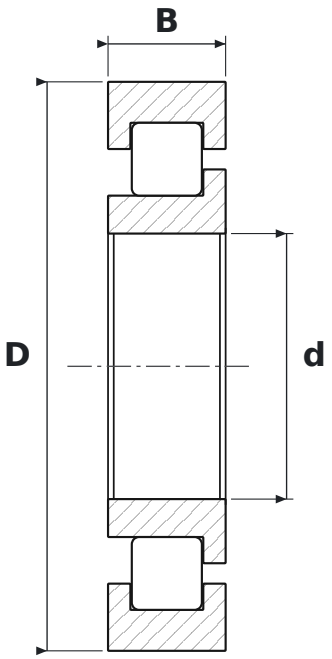

DIMENSIONS

d	bore diameter	**140 mm**
D	outside diameter	**300 mm**
B	width	**62 mm**

SPECIFICATIONS

Manufacturer	**SKF**
Manufacturer designation	**NJ328 ECJ**
Rolling elements	**single-row cylindrical roller bearing**
ECJ	**EC design, pressed steel cage (SKF)**
Seal	**open – no seals**
Radial internal clearance	**CN – normal**
Cage	**Steel**
Mass	**20 kg**