Cylindrical roller bearing NJ408-M1 FAG

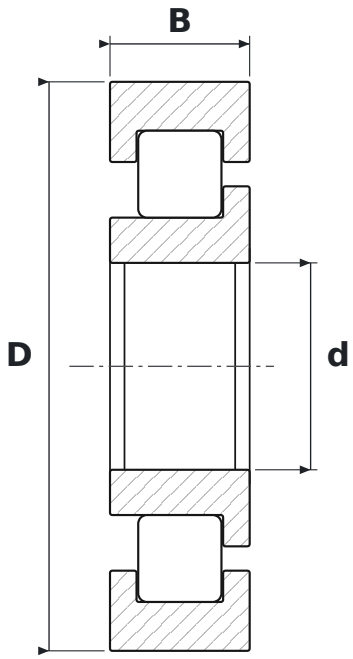

DIMENSIONS

d	bore diameter	**40 mm**
D	outside diameter	**110 mm**
B	width	**27 mm**

SPECIFICATIONS

Manufacturer	**FAG**
Manufacturer designation	**NJ408-M1**
Rolling elements	**single-row cylindrical roller bearing**
M1	**koszyk mosiężny masywny, dwuczęściowy, prowadzony na wałeczkach**
Seal	**open – no seals**
Radial internal clearance	**CN – normal**
Cage	**Brass**
Basic dynamic load rating C	**119 kN**
Basic static load rating C0	**95 kN**
Mass	**1.4 kg**