Cylindrical roller bearing NJ408 MC3 NSK

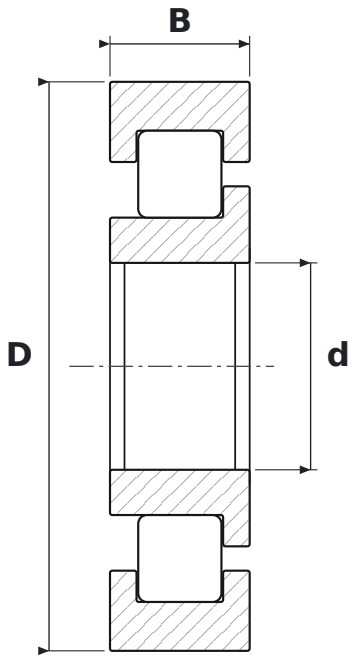

DIMENSIONS

d	bore diameter	**40 mm**
D	outside diameter	**110 mm**
B	width	**27 mm**

WHAT NJ408 MC3 MEANS

M	machined brass cage
C3	radial clearance greater than normal

SPECIFICATIONS

Manufacturer	**NSK**
Manufacturer designation	**NJ408 MC3**
Rolling elements	**single-row cylindrical roller bearing**