Cylindrical roller bearing NJ414-M1-C3 FAG

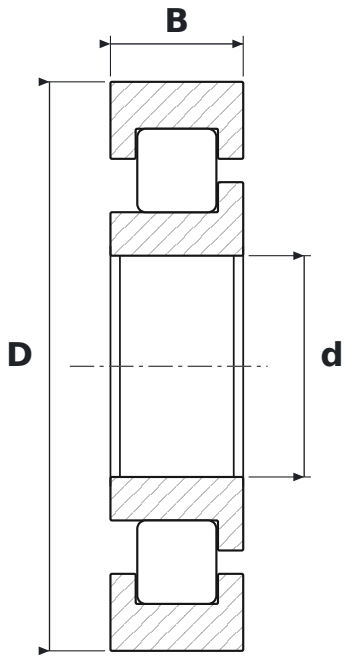

DIMENSIONS

d	bore diameter	**70 mm**
D	outside diameter	**180 mm**
B	width	**42 mm**

WHAT NJ414-M1-C3 MEANS

M1	koszyk mosiężny masywny, dwuczęściowy, prowadzony na wałeczkach
C3	radial clearance greater than normal

SPECIFICATIONS

Manufacturer	**FAG**
Manufacturer designation	**NJ414-M1-C3**
Rolling elements	**single-row cylindrical roller bearing**
Basic dynamic load rating C	**285 kN**
Basic static load rating C0	**255 kN**