Cylindrical roller bearing NN3028 K/SPW33 SKF

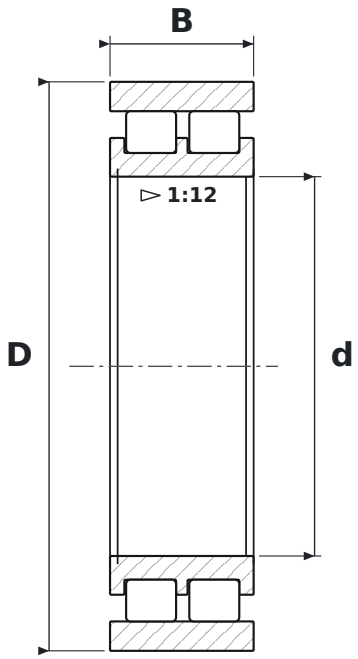

DIMENSIONS

d	bore diameter	**140 mm**
D	outside diameter	**210 mm**
B	width	**53 mm**

WHAT NN3028 K/SPW33 MEANS

K	tapered bore, taper 1:12
SP	dokładność wymiarowa wg klasy ISO 5, dokładność biegu wg klasy ISO 4
W33	lubrication groove and holes in the outer ring

SPECIFICATIONS

Manufacturer	**SKF**
Manufacturer designation	**NN3028 K/SPW33**
Rolling elements	**double-row cylindrical roller bearing**
Mass	**6.15 kg**