Cylindrical roller bearing NU205 C3 NACHI

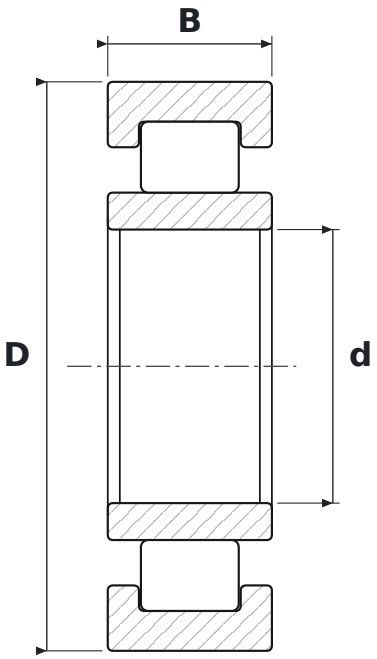

DIMENSIONS

d	bore diameter	**25 mm**
D	outside diameter	**52 mm**
B	width	**15 mm**

SPECIFICATIONS

Manufacturer	**NACHI**
Manufacturer designation	**NU205 C3**
Rolling elements	**single-row cylindrical roller bearing**
C3	**radial clearance greater than normal**
Seal	**open – no seals**