Cylindrical roller bearing NU205 ET NSK

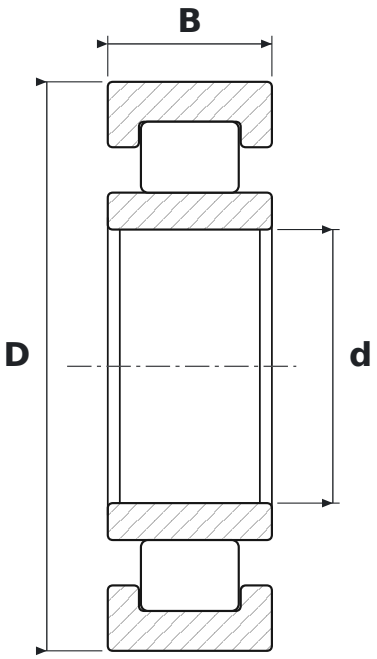

DIMENSIONS

d	bore diameter	**25 mm**
D	outside diameter	**52 mm**
B	width	**15 mm**

WHAT NU205 ET MEANS

E	reinforced design, higher load rating
T	koszyk z poliamidu 66 wzmocnionego włóknem szklanym

SPECIFICATIONS

Manufacturer	**NSK**
Manufacturer designation	**NU205 ET**
Rolling elements	**single-row cylindrical roller bearing**