Cylindrical roller bearing NU205 RC3 KOYO

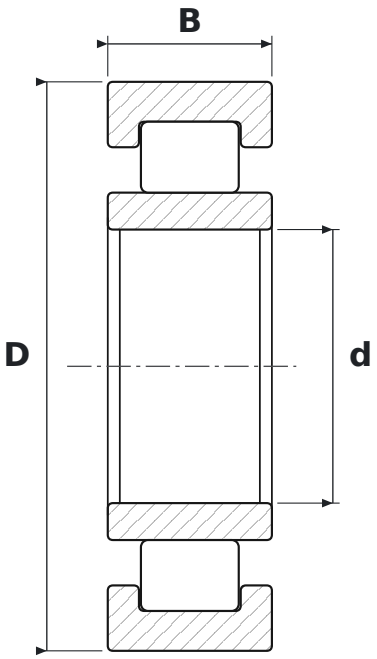

DIMENSIONS

d	bore diameter	**25 mm**
D	outside diameter	**52 mm**
B	width	**15 mm**

WHAT NU205 RC3 MEANS

R	wykonanie o zwiększonej nośności
C3	radial clearance greater than normal

SPECIFICATIONS

Manufacturer	**KOYO**
Manufacturer designation	**NU205 RC3**
Rolling elements	**single-row cylindrical roller bearing**