Cylindrical roller bearing NU206 EW NSK

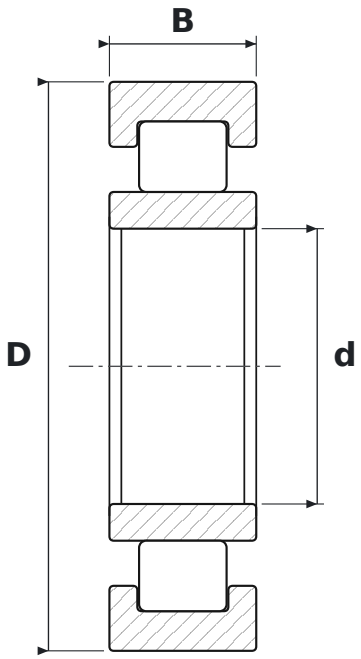

DIMENSIONS

d	bore diameter	**30 mm**
D	outside diameter	**62 mm**
B	width	**16 mm**

SPECIFICATIONS

Manufacturer	**NSK**
Manufacturer designation	**NU206 EW**
Rolling elements	**single-row cylindrical roller bearing**
EW	**reinforced design, steel cage (NSK)**
Seal	**open – no seals**
Radial internal clearance	**CN – normal**