CASTOMER

DATASHEET

Cylindrical roller bearing NU209 EWKC3 NSK

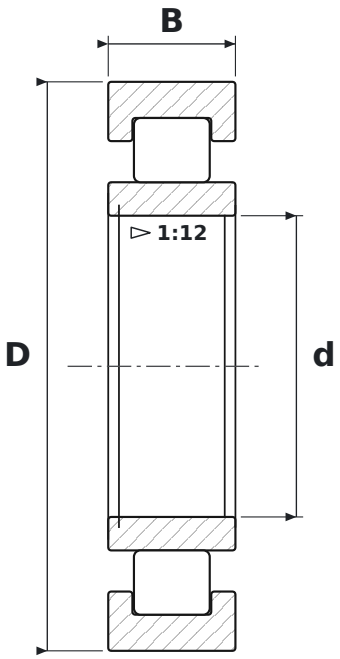

DIMENSIONS

d	bore diameter	**45 mm**
D	outside diameter	**85 mm**
B	width	**19 mm**

WHAT NU209 EWKC3 MEANS

EW	reinforced design, steel cage (NSK)
K	tapered bore, taper 1:12
C3	radial clearance greater than normal

SPECIFICATIONS

Manufacturer	**NSK**
Manufacturer designation	**NU209 EWKC3**
Rolling elements	**single-row cylindrical roller bearing**