Cylindrical roller bearing NU212 R KOYO

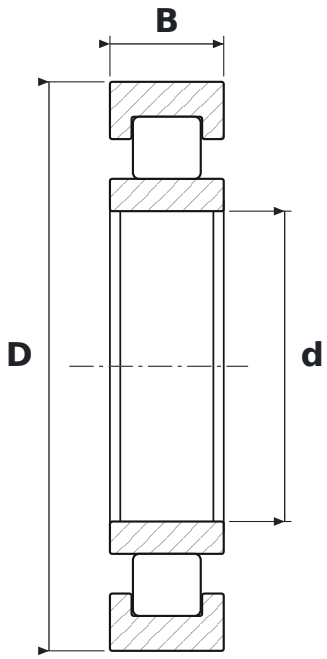

DIMENSIONS

d	bore diameter	**60 mm**
D	outside diameter	**110 mm**
B	width	**22 mm**

SPECIFICATIONS

Manufacturer	**KOYO**
Manufacturer designation	**NU212 R**
Rolling elements	**single-row cylindrical roller bearing**
Seal	**open – no seals**
Radial internal clearance	**CN – normal**