Cylindrical roller bearing NU216 ECML SKF

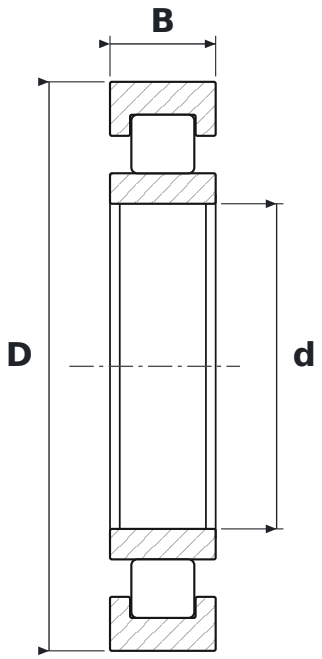

DIMENSIONS

d	bore diameter	**80 mm**
D	outside diameter	**140 mm**
B	width	**26 mm**

WHAT NU216 ECML MEANS

EC	reinforced EC design, more rollers (SKF)
ML	koszyk mosiężny masywny okienkowy, prowadzony na pierścieniu wewnętrznym lub zewnętrznym

SPECIFICATIONS

Manufacturer	**SKF**
Manufacturer designation	**NU216 ECML**
Rolling elements	**single-row cylindrical roller bearing**