# Cylindrical roller bearing NU2205-EM1 FAG

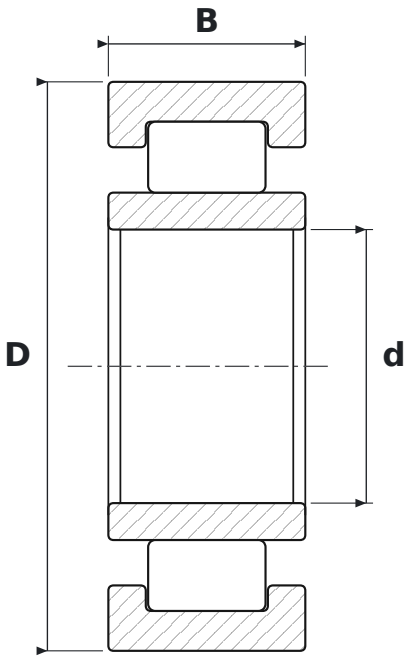


## DIMENSIONS

| | | |
|---|---|---|
| **d** | bore diameter | **25 mm** |
| **D** | outside diameter | **52 mm** |
| **B** | width | **18 mm** |

## WHAT NU2205-EM1 MEANS

| | |
|---|---|
| **E** | reinforced design, higher load rating |
| **M1** | koszyk mosiężny masywny, dwuczęściowy, prowadzony na wałeczkach |

## SPECIFICATIONS

| | |
|---|---|
| Manufacturer | **FAG** |
| Manufacturer designation | **NU2205-EM1** |
| Rolling elements | **single-row cylindrical roller bearing** |
| Mass | **0.178 kg** |