Cylindrical roller bearing NU2205 ETC3 NSK

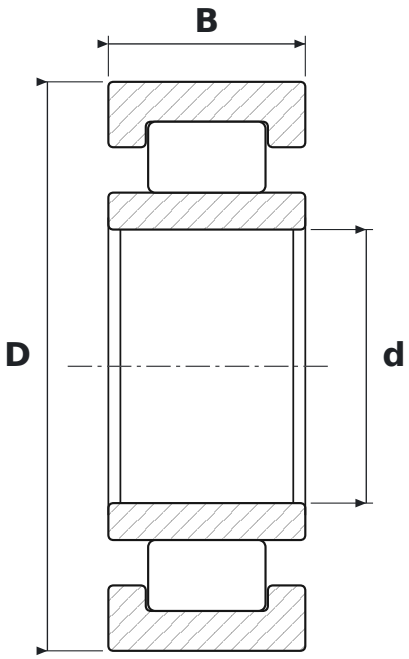

DIMENSIONS

d	bore diameter	**25 mm**
D	outside diameter	**52 mm**
B	width	**18 mm**

WHAT NU2205 ETC3 MEANS

E	reinforced design, higher load rating
T	koszyk z poliamidu 66 wzmocnionego włóknem szklanym
C3	radial clearance greater than normal

SPECIFICATIONS

Manufacturer	**NSK**
Manufacturer designation	**NU2205 ETC3**
Rolling elements	**single-row cylindrical roller bearing**