Cylindrical roller bearing NU2215 EMC3 NSK

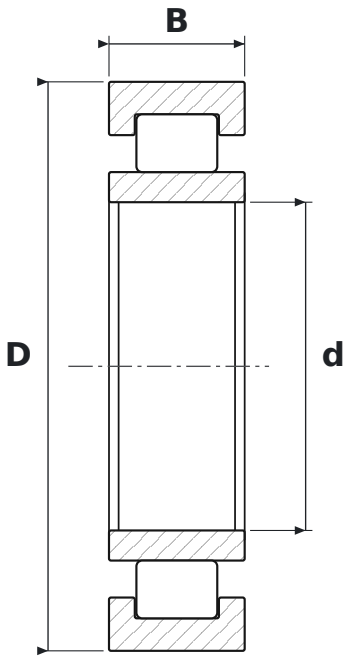

DIMENSIONS

d	bore diameter	**75 mm**
D	outside diameter	**130 mm**
B	width	**31 mm**

WHAT NU2215 EMC3 MEANS

EM	machined brass cage (NSK)
C3	radial clearance greater than normal

SPECIFICATIONS

Manufacturer	**NSK**
Manufacturer designation	**NU2215 EMC3**
Rolling elements	**single-row cylindrical roller bearing**