Cylindrical roller bearing NU2217 KOYO

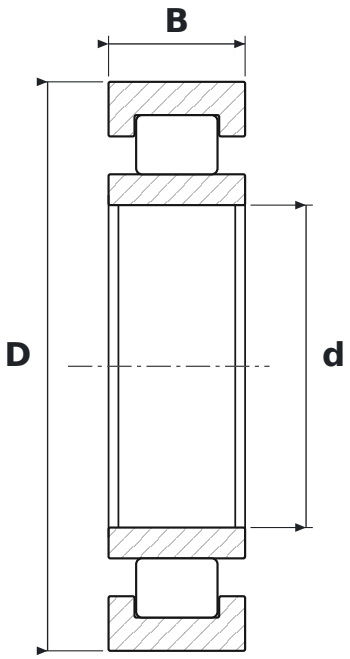

DIMENSIONS

d	bore diameter	**85 mm**
D	outside diameter	**150 mm**
B	width	**36 mm**

SPECIFICATIONS

Manufacturer	**KOYO**
Manufacturer designation	**NU2217**
Rolling elements	**single-row cylindrical roller bearing**
Seal	**open – no seals**
Radial internal clearance	**CN – normal**