Cylindrical roller bearing NU2310 ECPC3 SKF

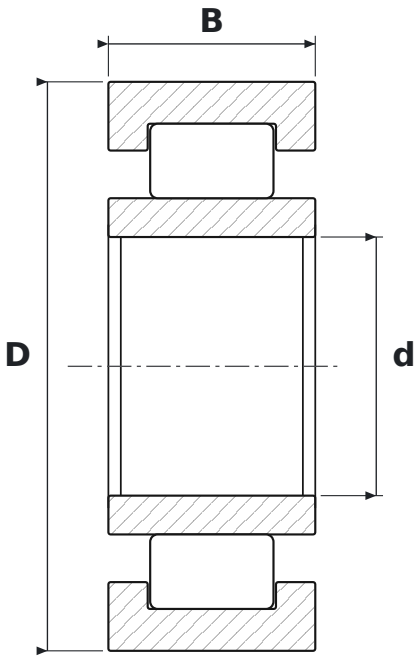

DIMENSIONS

d	bore diameter	**50 mm**
D	outside diameter	**110 mm**
B	width	**40 mm**

WHAT NU2310 ECPC3 MEANS

ECP	EC design, polyamide cage (SKF)
C3	radial clearance greater than normal

SPECIFICATIONS

Manufacturer	**SKF**
Manufacturer designation	**NU2310 ECPC3**
Rolling elements	**single-row cylindrical roller bearing**