Cylindrical roller bearing NU2315 WC3 NSK

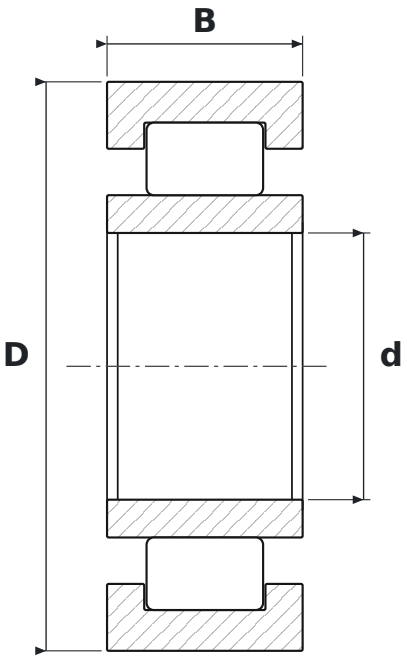

DIMENSIONS

d	bore diameter	**75 mm**
D	outside diameter	**160 mm**
B	width	**55 mm**

WHAT NU2315 WC3 MEANS

W	koszyk stalowy tłoczony
C3	radial clearance greater than normal

SPECIFICATIONS

Manufacturer	**NSK**
Manufacturer designation	**NU2315 WC3**
Rolling elements	**single-row cylindrical roller bearing**