Cylindrical roller bearing NU2316 EG15 SNR

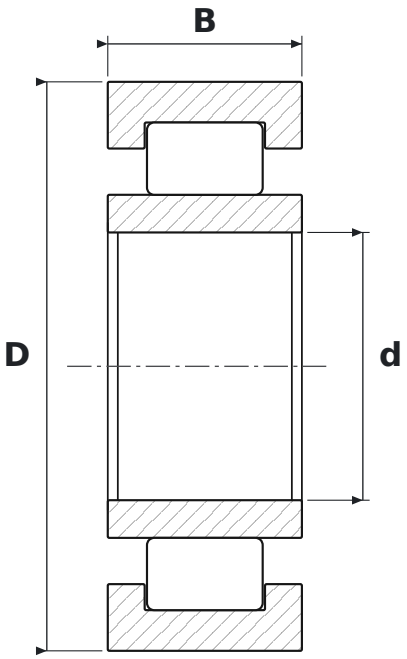

DIMENSIONS

d	bore diameter	**80 mm**
D	outside diameter	**170 mm**
B	width	**58 mm**

WHAT NU2316 EG15 MEANS

E	reinforced design, higher load rating
G15	koszyk poliamidowy wzmocniony włóknem szklanym

SPECIFICATIONS

Manufacturer	**SNR**
Manufacturer designation	**NU2316 EG15**
Rolling elements	**single-row cylindrical roller bearing**