Cylindrical roller bearing NU2318 ECJ SKF

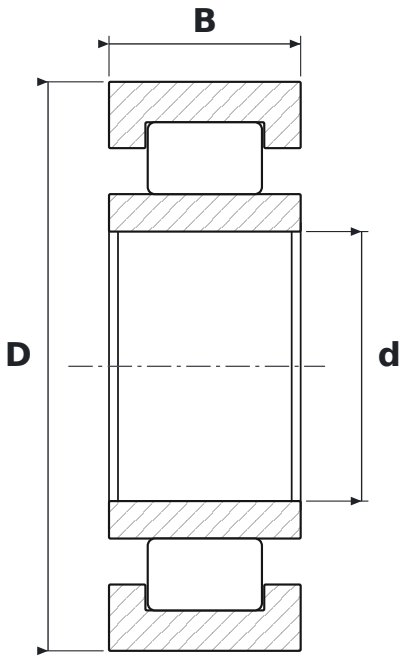

DIMENSIONS

d	bore diameter	**90 mm**
D	outside diameter	**190 mm**
B	width	**64 mm**

SPECIFICATIONS

Manufacturer	**SKF**
Manufacturer designation	**NU2318 ECJ**
Rolling elements	**single-row cylindrical roller bearing**
ECJ	**EC design, pressed steel cage (SKF)**
Seal	**open – no seals**
Radial internal clearance	**CN – normal**
Cage	**Steel**
Mass	**8.1 kg**