Cylindrical roller bearing NU234-EM1-A FAG

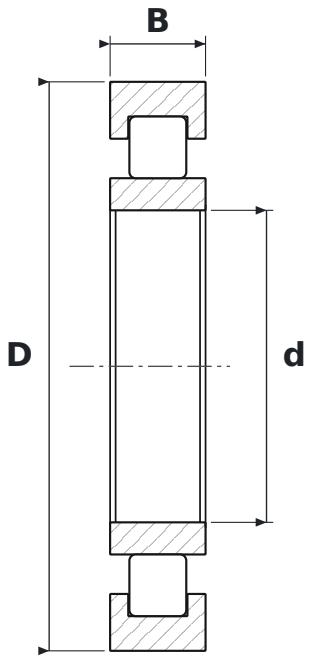

DIMENSIONS

d	bore diameter	**170 mm**
D	outside diameter	**310 mm**
B	width	**52 mm**

WHAT NU234-EM1-A MEANS

E	reinforced design, higher load rating
M1	koszyk mosiężny masywny, dwuczęściowy, prowadzony na wałeczkach

SPECIFICATIONS

Manufacturer	**FAG**
Manufacturer designation	**NU234-EM1-A**
Rolling elements	**single-row cylindrical roller bearing**