Cylindrical roller bearing NU234 EMC3 NSK

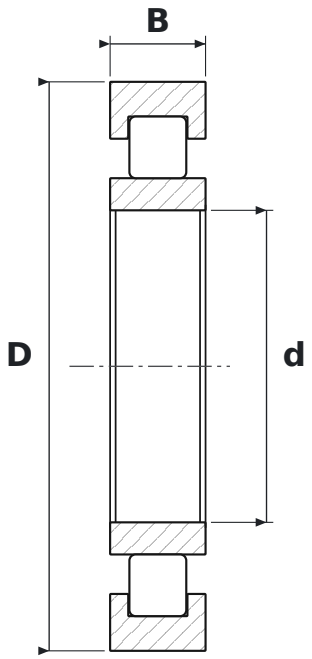

DIMENSIONS

d	bore diameter	**170 mm**
D	outside diameter	**310 mm**
B	width	**52 mm**

WHAT NU234 EMC3 MEANS

EM	machined brass cage (NSK)
C3	radial clearance greater than normal

SPECIFICATIONS

Manufacturer	**NSK**
Manufacturer designation	**NU234 EMC3**
Rolling elements	**single-row cylindrical roller bearing**