Cylindrical roller bearing NU240-E-M1-A FAG

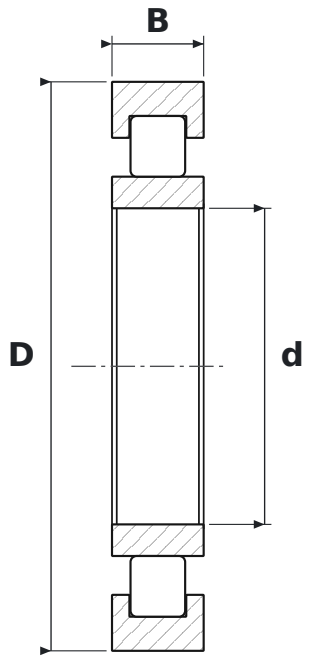

DIMENSIONS

d	bore diameter	**200 mm**
D	outside diameter	**360 mm**
B	width	**58 mm**

WHAT NU240-E-M1-A MEANS

E	reinforced design, higher load rating
M1	koszyk mosiężny masywny, dwuczęściowy, prowadzony na wałeczkach

SPECIFICATIONS

Manufacturer	**FAG**
Manufacturer designation	**NU240-E-M1-A**
Rolling elements	**single-row cylindrical roller bearing**