Cylindrical roller bearing NU240-EM1 FAG

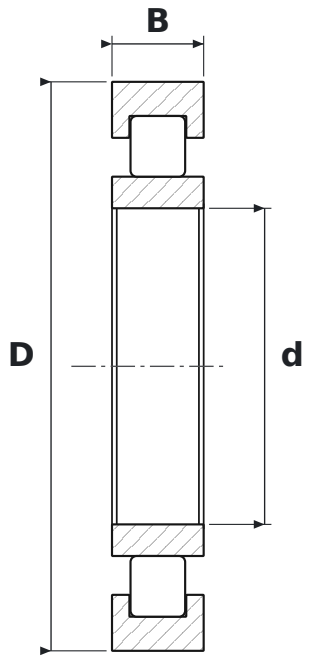

DIMENSIONS

d	bore diameter	**200 mm**
D	outside diameter	**360 mm**
B	width	**58 mm**

WHAT NU240-EM1 MEANS

E	reinforced design, higher load rating
M1	koszyk mosiężny masywny, dwuczęściowy, prowadzony na wałeczkach

SPECIFICATIONS

Manufacturer	**FAG**
Manufacturer designation	**NU240-EM1**
Rolling elements	**single-row cylindrical roller bearing**
Basic dynamic load rating C	**750 kN**
Basic static load rating C0	**1,040 kN**
Mass	**27.5 kg**