Cylindrical roller bearing NU240 EMC3 NSK

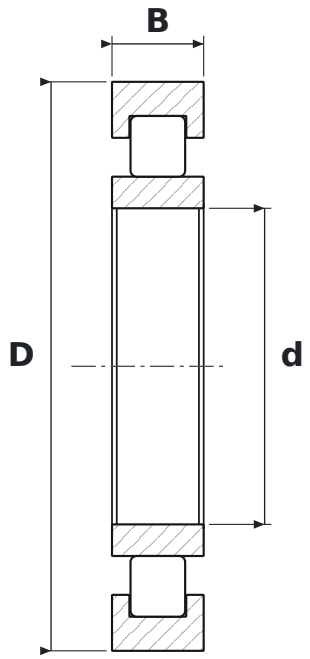

DIMENSIONS

d	bore diameter	**200 mm**
D	outside diameter	**360 mm**
B	width	**58 mm**

WHAT NU240 EMC3 MEANS

EM	machined brass cage (NSK)
C3	radial clearance greater than normal

SPECIFICATIONS

Manufacturer	**NSK**
Manufacturer designation	**NU240 EMC3**
Rolling elements	**single-row cylindrical roller bearing**
Mass	**26.9 kg**