Cylindrical roller bearing NU305-EM1-C3 FAG

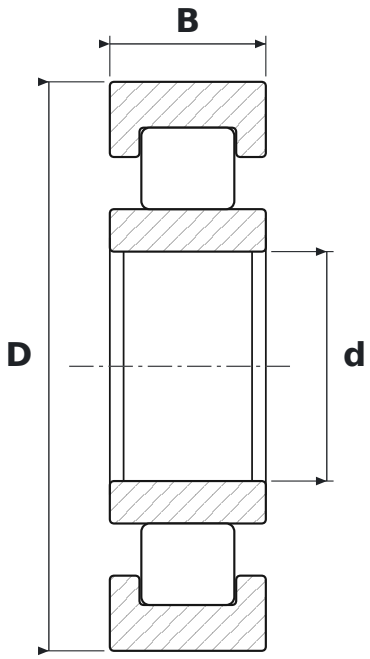

DIMENSIONS

d	bore diameter	**25 mm**
D	outside diameter	**62 mm**
B	width	**17 mm**

WHAT NU305-EM1-C3 MEANS

E	reinforced design, higher load rating
M1	koszyk mosiężny masywny, dwuczęściowy, prowadzony na wałeczkach
C3	radial clearance greater than normal

SPECIFICATIONS

Manufacturer	**FAG**
Manufacturer designation	**NU305-EM1-C3**
Rolling elements	**single-row cylindrical roller bearing**
Mass	**0.267 kg**