Cylindrical roller bearing NU306 R KOYO

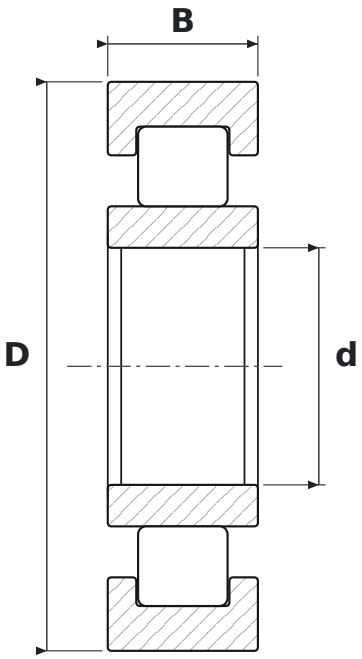

DIMENSIONS

d	bore diameter	**30 mm**
D	outside diameter	**72 mm**
B	width	**19 mm**

SPECIFICATIONS

Manufacturer	**KOYO**
Manufacturer designation	**NU306 R**
Rolling elements	**single-row cylindrical roller bearing**
Seal	**open – no seals**
Radial internal clearance	**CN – normal**