Cylindrical roller bearing NU312 ECM SKF

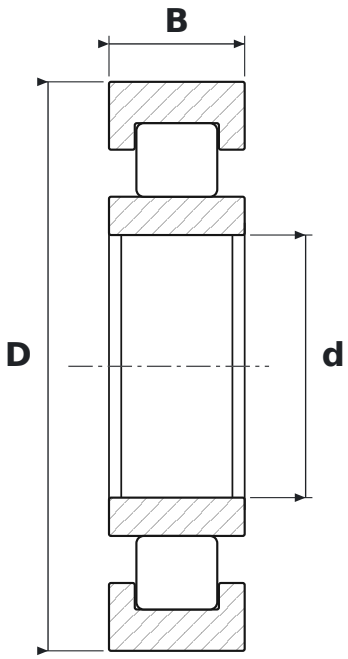

DIMENSIONS

d	bore diameter	**60 mm**
D	outside diameter	**130 mm**
B	width	**31 mm**

SPECIFICATIONS

Manufacturer	**SKF**
Manufacturer designation	**NU312 ECM**
Rolling elements	**single-row cylindrical roller bearing**
ECM	**EC design, machined brass cage (SKF)**
Seal	**open – no seals**
Radial internal clearance	**CN – normal**
Cage	**Brass**
Mass	**2.11 kg**