Cylindrical roller bearing NU313 C3 KOYO

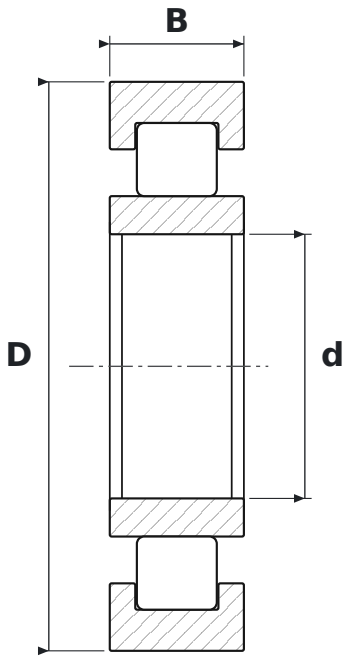

DIMENSIONS

d	bore diameter	**65 mm**
D	outside diameter	**140 mm**
B	width	**33 mm**

SPECIFICATIONS

Manufacturer	**KOYO**
Manufacturer designation	**NU313 C3**
Rolling elements	**single-row cylindrical roller bearing**
C3	**radial clearance greater than normal**
Seal	**open – no seals**