Cylindrical roller bearing NU314 C3 KOYO

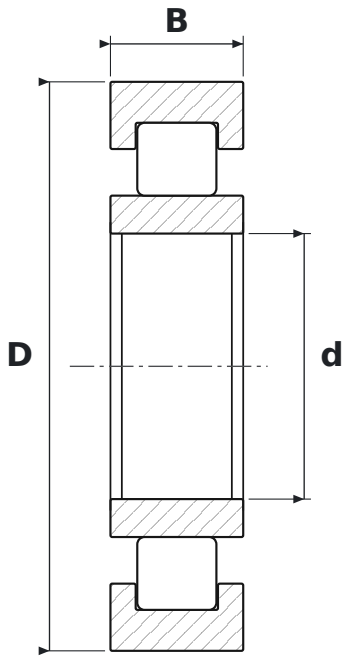

DIMENSIONS

d	bore diameter	**70 mm**
D	outside diameter	**150 mm**
B	width	**35 mm**

SPECIFICATIONS

Manufacturer	**KOYO**
Manufacturer designation	**NU314 C3**
Rolling elements	**single-row cylindrical roller bearing**
C3	**radial clearance greater than normal**
Seal	**open – no seals**