Cylindrical roller bearing NU316 C3 NACHI

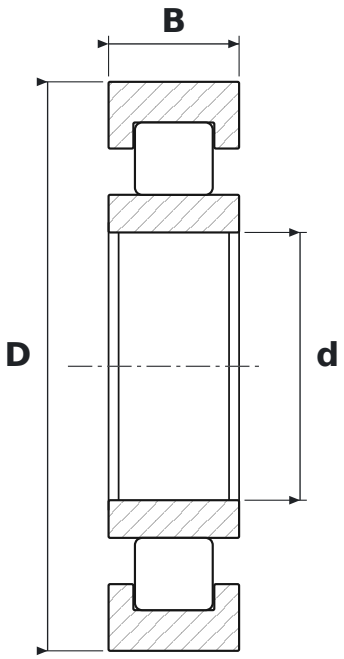

DIMENSIONS

d	bore diameter	**80 mm**
D	outside diameter	**170 mm**
B	width	**39 mm**

SPECIFICATIONS

Manufacturer	**NACHI**
Manufacturer designation	**NU316 C3**
Rolling elements	**single-row cylindrical roller bearing**
C3	**radial clearance greater than normal**
Seal	**open – no seals**