# Cylindrical roller bearing NU316 ECMC3 SKF

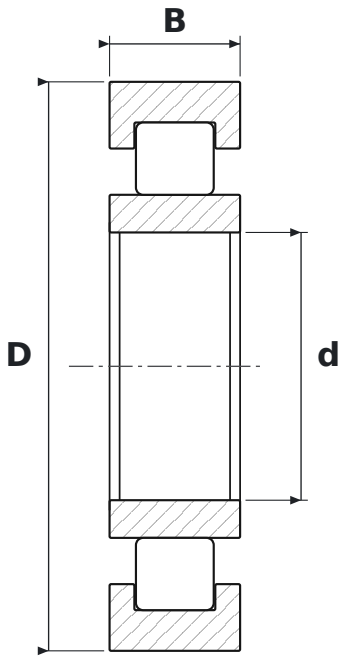


## DIMENSIONS

| | | |
|---|---|---|
| **d** | bore diameter | **80 mm** |
| **D** | outside diameter | **170 mm** |
| **B** | width | **39 mm** |

## WHAT NU316 ECMC3 MEANS

| | |
|---|---|
| **ECM** | EC design, machined brass cage (SKF) |
| **C3** | radial clearance greater than normal |

## SPECIFICATIONS

| | |
|---|---|
| Manufacturer | **SKF** |
| Manufacturer designation | **NU316 ECMC3** |
| Rolling elements | **single-row cylindrical roller bearing** |