# Cylindrical roller bearing NUB208 E ZEN

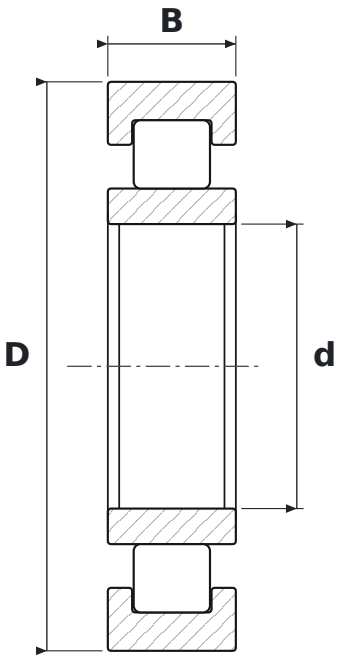


## DIMENSIONS

| | | |
|---|---|---|
| **d** | bore diameter | **40 mm** |
| **D** | outside diameter | **80 mm** |
| **B** | width | **18 mm** |

## SPECIFICATIONS

| | |
|---|---|
| Manufacturer | **ZEN** |
| Manufacturer designation | **NUB208 E** |
| Rolling elements | **cylindrical roller bearing** |
| E | **reinforced design, higher load rating** |
| Seal | **open – no seals** |
| Radial internal clearance | **CN – normal** |