# Cylindrical roller bearing NUP208 EGC3 NACHI

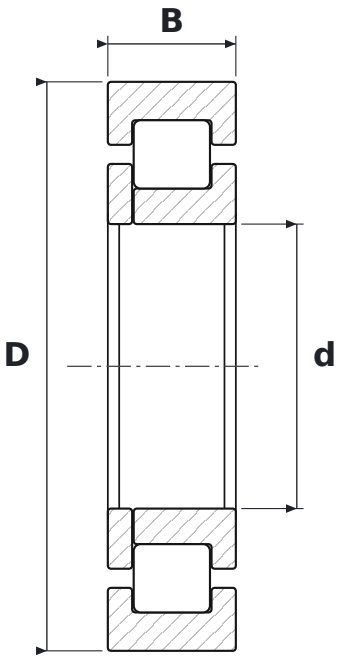


## DIMENSIONS

| | | |
|---|---|---|
| **d** | bore diameter | **40 mm** |
| **D** | outside diameter | **80 mm** |
| **B** | width | **18 mm** |

## WHAT NUP208 EGC3 MEANS

| | |
|---|---|
| **EG** | wykonanie o zwiększonej nośności (większe i dłuższe wałeczki), koszyk poliamidowy wzmocniony włóknem szklanym |
| **C3** | radial clearance greater than normal |

## SPECIFICATIONS

| | |
|---|---|
| Manufacturer | **NACHI** |
| Manufacturer designation | **NUP208 EGC3** |
| Rolling elements | **single-row cylindrical roller bearing** |