CASTOMER

DATASHEET

Cylindrical roller bearing NUP210 EG15 SNR

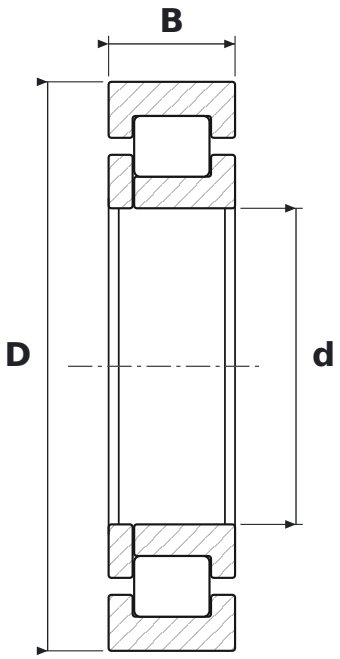

DIMENSIONS

d	bore diameter	**50 mm**
D	outside diameter	**90 mm**
B	width	**20 mm**

WHAT NUP210 EG15 MEANS

E	reinforced design, higher load rating
G15	koszyk poliamidowy wzmocniony włóknem szklanym

SPECIFICATIONS

Manufacturer	**SNR**
Manufacturer designation	**NUP210 EG15**
Rolling elements	**single-row cylindrical roller bearing**