Cylindrical roller bearing NUP2206 ETVP2 FAG FAG

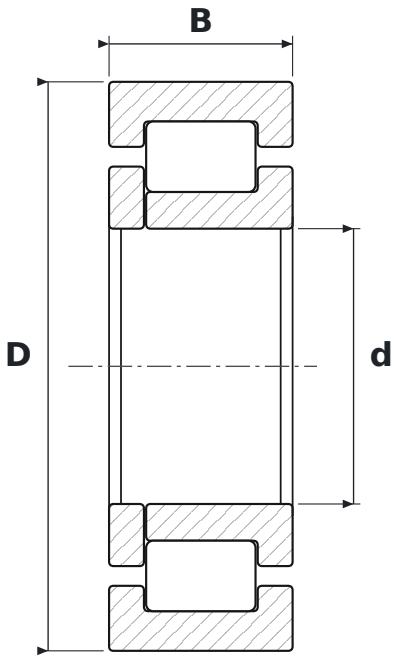

DIMENSIONS

d	bore diameter	**30 mm**
D	outside diameter	**62 mm**
B	width	**20 mm**

WHAT NUP2206 ETVP2 FAG MEANS

E	reinforced design, higher load rating
TVP2	polyamide window cage, design 2 (FAG)

SPECIFICATIONS

Manufacturer	**FAG**
Manufacturer designation	**NUP2206 ETVP2 FAG**
Rolling elements	**single-row cylindrical roller bearing**
Mass	**0.272 kg**