# Cylindrical roller bearing NUP230 ECJ SKF

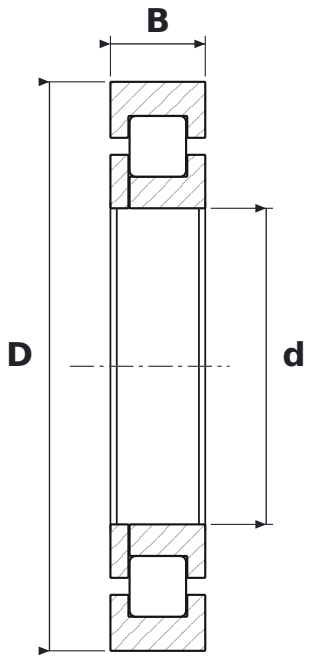


## DIMENSIONS

| | | |
|---|---|---|
| **d** | bore diameter | **150 mm** |
| **D** | outside diameter | **270 mm** |
| **B** | width | **45 mm** |

## SPECIFICATIONS

| | |
|---|---|
| Manufacturer | **SKF** |
| Manufacturer designation | **NUP230 ECJ** |
| Rolling elements | **single-row cylindrical roller bearing** |
| ECJ | **EC design, pressed steel cage (SKF)** |
| Seal | **open – no seals** |
| Radial internal clearance | **CN – normal** |
| Cage | **Steel** |
| Mass | **10.728 kg** |