Cylindrical roller bearing NUP230 MC3 NSK

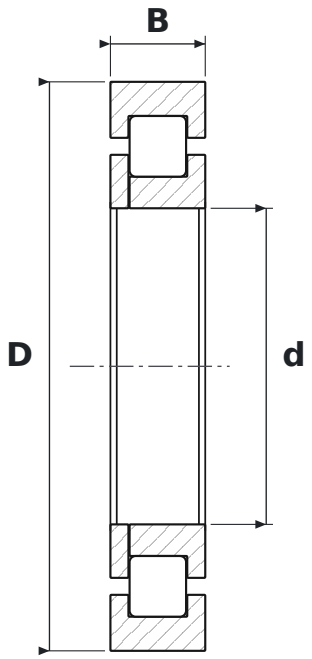

DIMENSIONS

d	bore diameter	**150 mm**
D	outside diameter	**270 mm**
B	width	**45 mm**

WHAT NUP230 MC3 MEANS

M	machined brass cage
C3	radial clearance greater than normal

SPECIFICATIONS

Manufacturer	**NSK**
Manufacturer designation	**NUP230 MC3**
Rolling elements	**single-row cylindrical roller bearing**